DOC # 0139382
08/26/2011 01:07 PM
Official Record
Recording requested By
DESERT HAWK RESOURCES INC.
Lincoln County - NV
Leslie Boucher - Recorder
Fee $409.00 Page 1 of 3
6011 Recorded By: RE
Book- 266 Page- 0401
0139382

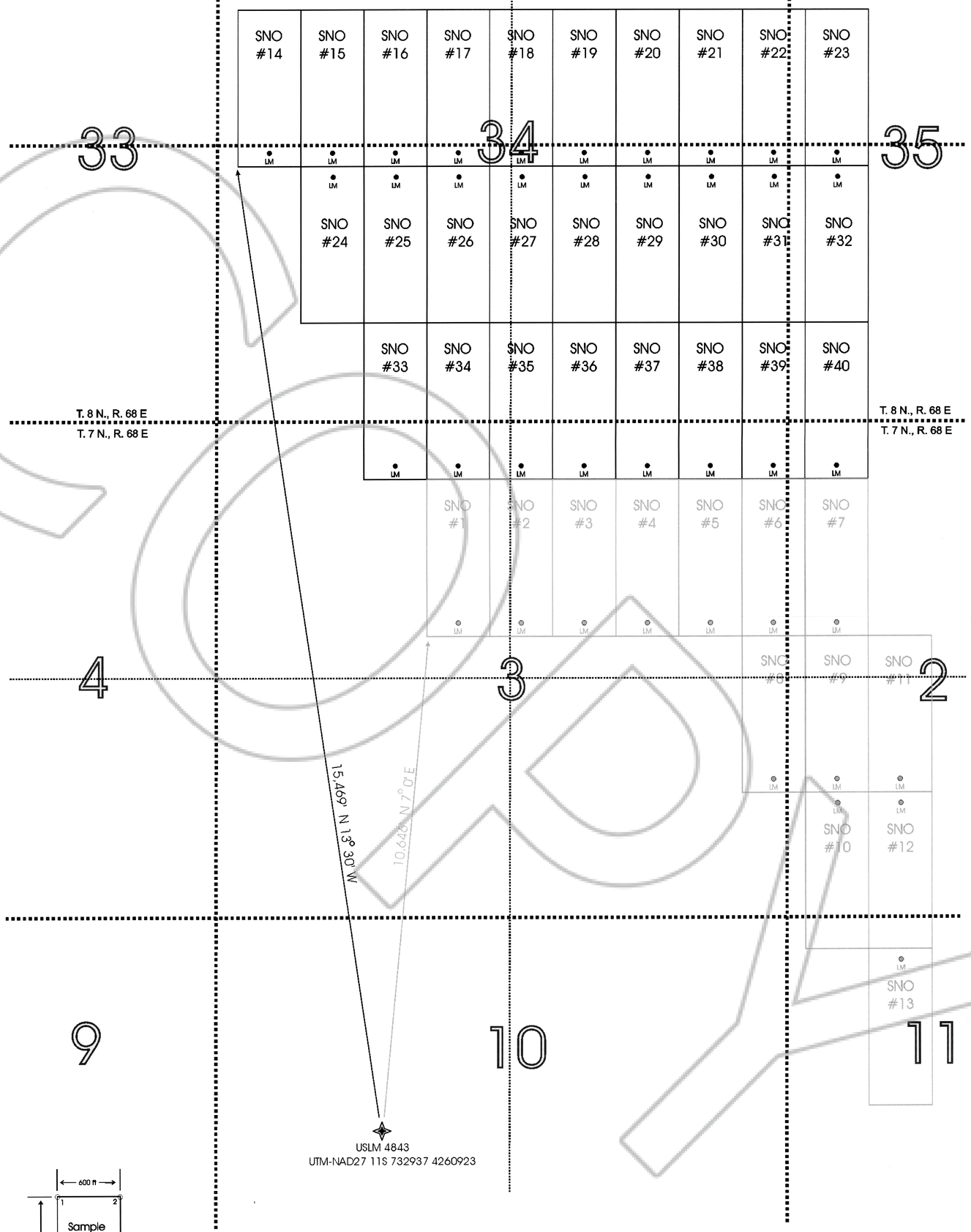

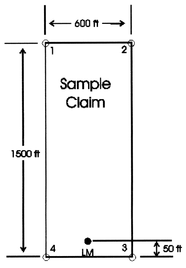

Note: Unsurveyed townships, no original PLSS corners
Section corners herein were derived from data encoded
in Garmin US TOPO 24k West map software

300 150 0 300 600 1500 FEET
Scale

Desert Hawk Resources Inc.
HC 10, Box 15, Pioche NV, 89043

Compiled	Date	Drafted	Date
Doug Oliver	6/11	Tom Meringer	8/11
Tom Meringer	7/11		

MAP OF THE SNO-14
THRU SNO-40
LODE CLAIMS

LINCOLN COUNTY, NEVADA
T. 7 N., R. 68 E., SEC 2, 3, 11
T. 8 N., R. 68 E., SEC 33, 34, 35

DATE: 8/15/2011 Scale: 1 inch = 500 feet

Claims #1 thru #13 located:
May 30, 2011 by
Doug Oliver
4812 Brentford Rd
Colleyville, Texas 76034

Claims #14 thru #40 located
July 10, 2011 by
Tom Meringer
2832 Powell St
Springdale, AR 72764